MALAXY

Since our first fastener factory (Zhejiang Malaxy Hardware Factory) was established in 2001, we set up the export branch office (Shanghai Malaxy Industry Co., Ltd.) in 2006. MALAXY is a leading manufacturer in the fastener industry and mechanical equipment industry, with perfect product structure. MALAXY has long been committed to the R & D, production and sales of bolts, nuts, screws, washers and jacks, realizing business and technological innovation. At the same time, we listen to our partners' needs around the world. MALAXY is qualified with TS 16949, ISO 9001, and ISO 14001. MALAXY products are exported to more than 70 countries such as USA, Germany, Peru and other countries, achieving sustained high-quality growth, and striving to become a world-class manufacturer in the industry.

MALAXY

PRODUCTION EXPERIENCE

20+ YEARS

EXPORT TO

70+ COUNTRIES

Factory

Tel: +86 (0573) 8681 5795
Email: info@malaxygroup.com
Address: No. 1, Zhejiang Kaiji Science and Technology Industrial Park, Jiaxing City, Zhejiang Province

Export Branch Office

Tel: +86 (021) 5505 8885
Email: manager.max@malaxygroup.com
Address: 8F, 694 Huimin Road, Yangpu District, Shanghai

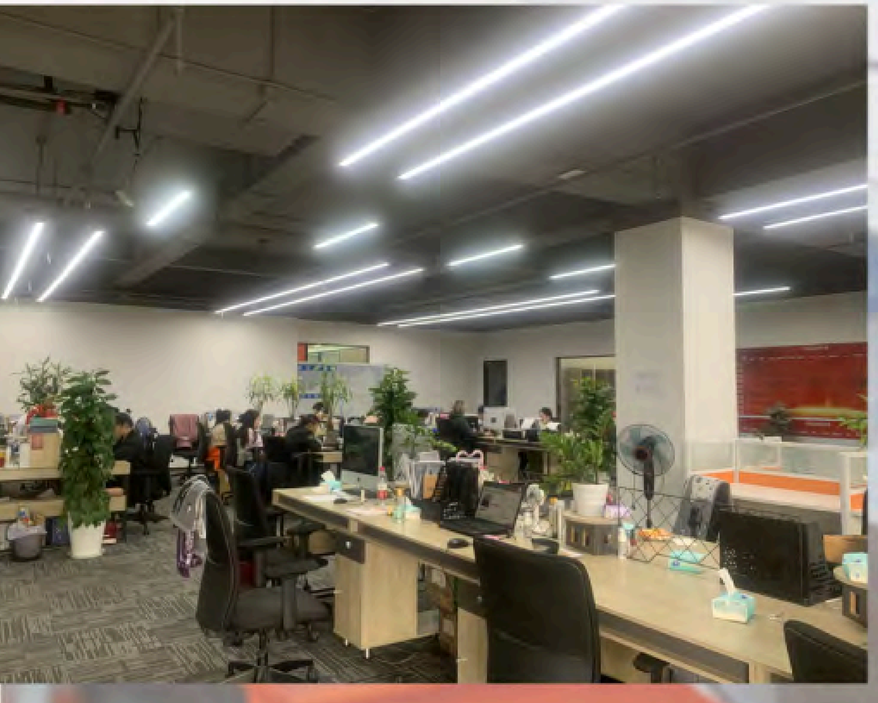

MALAXY COOPERATION CASES

Project: Hong Kong-Zhuhai-Macao Bridge

Time: 2009.12

Malaxy Supplied: Hex Bolts, Hex Nuts

Project: GMC of Uzbekistan

Time: 2021.10

Malaxy Supplied: Rivet

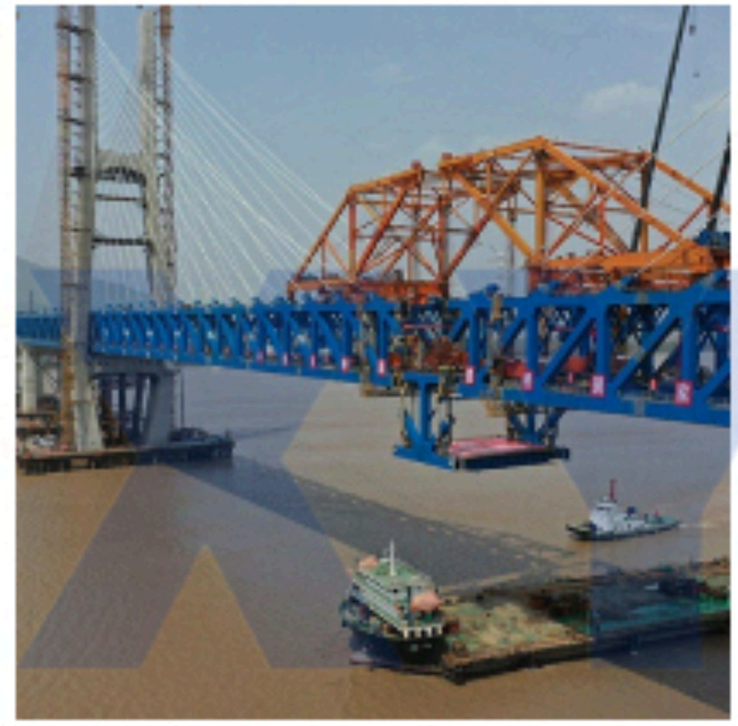

Project: H -T High-speed Railway

Time: 2017.12

Malaxy Supplied: Heavy Hex Nuts

And so on...

bsi.

TS 16949
Automotive Quality Management

ISO 9001
Quality Management

ISO 14001
Environmental Management

TS 16949

bsi.

Certificate of Registration

ISO 9001

SGS

SHANGHAI MALAXY INDUSTRY CO., LTD.
上海浩浦实业有限公司

ISO 9001:2008

Sales of fasteners and building hardware.

ISO 14001

nqa global assurance

Certificate of Registration

This is to certify that the Environmental Management System of

Shanghai Malaxy Industry Co., Ltd.

applicable to

ISO 14001:2004

MALAXY

SHANGHAI MALAXY INDUSTRY CO., LTD.

CONTENTS 目录

HEX WASHER SELF DRILLING SCREW 1
SPECIAL SELF DRILUNG SCREW 2
SELF DRILLING SCREW & CONCRETE SCREW 3
SELF TAPPING SCREW 4
THREAD CUTTING TAPPING SCREW 5
DRYWAII SCREW 6
DIN912 HEXAGON SOCKET CAP SCREW 7
DIN933 HEAGON HEAD SCREW 8
DIN7991 HEXAGON SOCKETCOUNTERSUNK HEAD SCREW 9
ISO7380 HEXAGON SOCKET BUTTON SCREW & CONCRETE SCREW 10
CHIPBOARD SCREW & SPECIAL CHIPBOARD SCREW 11
ANCHOR & WEDGE ANCHORS 12
BOLT AHCHORS & SLEEVE AHCHORS & TOGGLE BOLTS Unit:inch 13
METAL FRAME ANCHOR & HANGER BOLT 14
ANCHOR 15
NON-STANDARDSCREW & MAGNETIC NUT SETTER 16
PALLET NAIL & CONCRETE NAIL WASHER 17
WASHER 18
DIN 934 NUTS & DIN 936 NUTS 19
DIN 928 NUTS & DIN 929 NUTS & DIN 985 NUTS & DIN 6923 NUTS 20
DIN 935 NUTS & DIN 1587 NUTS 21
DIN 7989 NUTS & DIN 9021 NUTS & DIN 125-A NUTS & DIN 127-B NUTS 22
DIN 7980 NUTS & DIN 6798-A NUTS 23

Diagrammatic Drawing:The layout of the factory

Diagrammatic Drawing:The layout of the factory

Hex Washer Self Drilling Screw

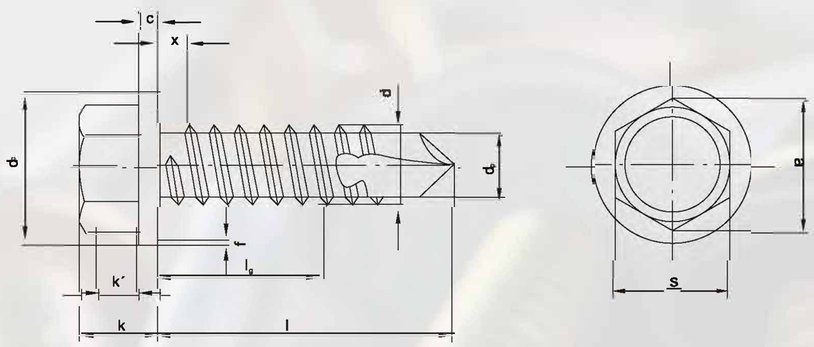

d		ST3.5	(ST3.9)	ST4.2	ST4.8	ST5.5	ST6.3
c	min.	0.6	0.6	0.9	0.9	1	1
d_c	max.	8.3	8.3	8.8	10.5	11	13.2
	min.	7.6	7.6	8.2	9.8	10	12.2
f [2]	≈ ~	0.4	0.4	0.4	0.5	0.5	0.5
e	mn.	5.96	5.96	7.59	8.71	8.71	10.95
k	max.	3.45	3.45	4.25	4.45	5.45	6.45
	min.	3.2	3.2	4	4.15	5.15	6.15
k' [2]	mn.	1.55	1.55	1.9	2	2.7	3.3
n	公称尺寸	1	1	1.2	1.2	1.6	1.6
	mn.	1.06	1.06	1.26	1.26	1.66	1.66
	max.	1.2	1.2	1.51	1.51	1.91	1.91
r	max.	0.5	0.5	0.6	0.7	0.8	0.9
s	公称尺寸	5.5	5.5	7	8	8	10
	min.	5.32	5.32	6.78	7.78	7.78	9.78
t	min.	1	1	1.2	1.4	1.6	1.8
	max.	1.4	1.4	1.6	1.8	2	2.2

1.Specification:according to DIN 7504K,(ANSI B18.6.4)&Customer′ S design to make
2.Finish:zinc/black/hot dip galvanized/dacromet
3.Size:from M3.5-M6.3(6#-14#)，length from 9.5-200mm(3/8′- 8″)，
with No.1-No.5 drilling point.

Hex Washer Self Drilling Screw

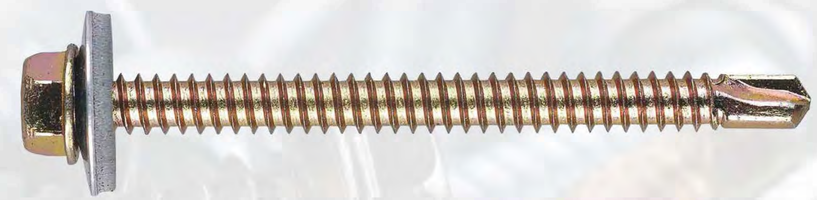

Special Self Drilling Screw

C1022 hardened self drilling screw, with reduced point or extra long drilling point, with painted head.
Standard: DIN/ ANSI
Size: M3.5-M6.3(6#-14#) Length: 9.5-200mm(3/8″- 8″)
Finish: zinc/dacromet/ nickel/phosphate/spray paint

ADDITIONAL REQUEST				
Serration Under Head	W/O washer	W/ Bonded washer	W/ PVC Washer	W/ Iron Rubber Assembly
W/ Head Mark	W/wing	Slotted + Wing	Other	

Self Drilling Screw

C1022 hardened self drilling screw with pan/flat/truss/pan framing head

1.Specification:according to DIN 7504, (ANSI B18.6.4) & Customer's design to make

2.Finish: zinc/black/hot dip galvanized/dacromet

No	6#	7#	8#	10#	12#	Head Type
3/8 " (9.5)	√					
1/2 " (13)	√	√	√	√		Pan HD
5/8 " (16)	√	√	√	√	√	
3/4 " (19)	√	√	√	√	√	CSK HD
1 " (25)	√	√	√	√	√	
1-1/4 " (32)	√		√	√	√	Truss HD
1-1/2 " (38)	√		√	√	√	
2 " (50)	√		√	√	√	Pan Framing HD
2-1/2 " (63.5)			√	√	√	

Concrete Screw

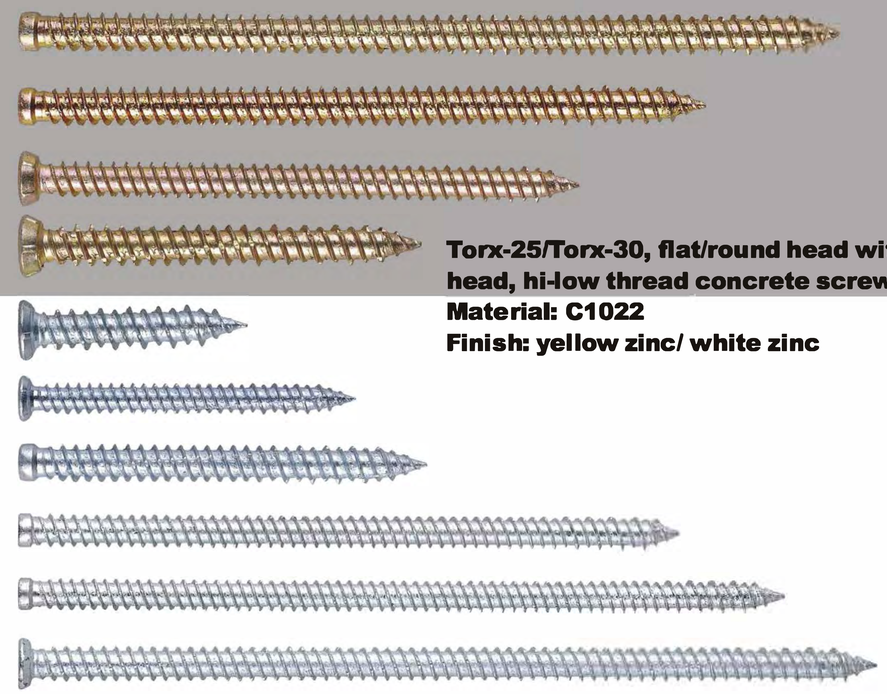

Torx-25/Torx-30, flat/round head with nibs under head, hi-low thread concrete screw.
Material: C1022
Finish: yellow zinc/ white zinc

Screw Size	PCS/Box/CTN	Weight kgs/1000PCS
M7.5x42	200x12/2400	9.3
M7.5x52	200x12/2400	11.3
M7.5x62	200x12/2400	13.3
M7.5x72	100x12/1200	15.3
M7.5x82	100x10/1000	17.3
M7.5x92	100x8/800	19.3
M7.5x102	100x8/800	21.3
M7.5x112	100x6/600	23.3
M7.5x122	100x6/600	25.3
M7.5x132	100x6/600	27.3
M7.5x142	100x6/600	29.3
M7.5x152	100x6/600	31.3
M7.5x162	100x6/600	33.3
M7.5x172	100x6/600	35.3
M7.5x182	100x4/400	37.3
M7.5x192	100x4/400	39.3
M7.5x202	100x4/400	41.3
M7.5x212	100x4/400	43.3

Self Tapping Screw

C1022 hardened self tapping screw with hex/ hex washer/pan/CSK/ truss/ pan framing heads
Standard: DIN/ ANSI
Size: M3.5-M6.3(6#-14#) Length: 9.5-200mm(3/8″- 8″)
Finish: zinc/dacromet/ nickel/black

THREAD TYPE				
Type A	BSD TYPE	CSD TYPE	MACHINE	HI-LOW
10# -12THD	6# -20THD	6# -32THD		
12# -11THD	8# -18THD	8# -32THD		
14# -10THD	10# -16THD	10# -24THD		
	12# -14THD	12# -24THD		
	14# -14THD	14# -20THD		

Thread Cutting Tapping Screw

C1022 hardened self tapping screw with hex/ hex washer/pan/ CSK/ truss/ pan framing heads
Standard: DIN/ ANSI
Size: M3.5-M6.3(6#--14#) Length: 9.5-200mm(3/8″- 8″)
Finish: zinc/dacromet/ nickel/phosphate/spray paint

Self tapping screws are most often used to fasten sheet metal composite materials, woods and plastics. They have a high tensile strength value, and are durable enough to handle repeated assembly and disassembly. There are two different kinds of self tapping screws: thread forming and thread cutting.

TYPE-17

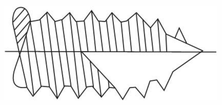

TYPE-23

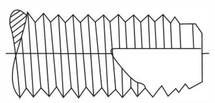

TYPE-25

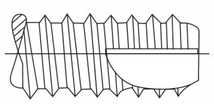

TYPE-D

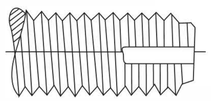

Drywall Screw

Drywall screw phil bugle head twinfast coarse/fine thread
Finish: grey/black phosphate/zinc

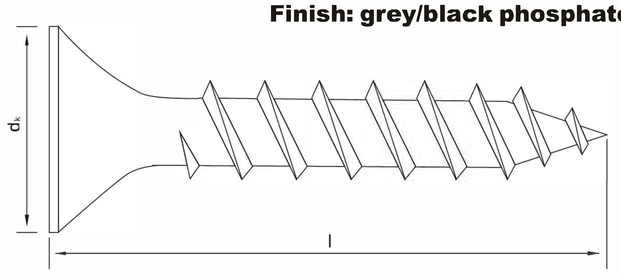

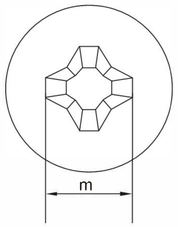

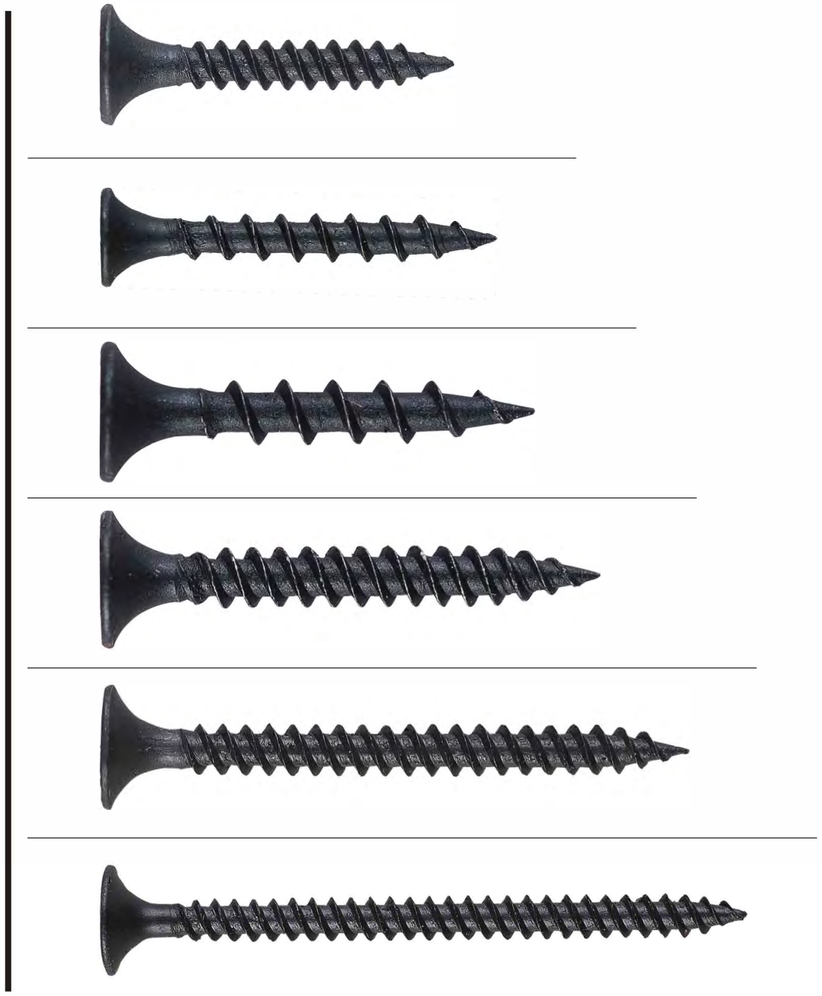

THREAD SIZE	THREA/in	dk	Phillips No.	m	L(inch)
6#	18	8.4	2	4.9	1 " -2-1/2 "
7#	16	8.4	2	4.9	1 " -2-1/2 "
8#	45	8.4	2	4.9	2 " -3-1/2

THREAD SIZE L	6# MPCS/CTN	KG/CTN	7# MPCS/CTN	KG/CTN	8# MPCS/CTN	KG/CTN
X1 "	10.0	14.0	8.0	15.5		
X1-1-8 "	9.0	14.5	7.0	15.0		
X1-1/4 "	8.0	14.0	6.0	14.0		
X1-3/8 "	7.0	13.5	5.0	12.5		
X1-1/2 "	6.0	12.5	4.5	12.5		
X1-5/8 "	5.0	11.0	4.0	11.5		
X1-3/4 "	4.5	11.0	3.5	11.0		
X1-7/8 "	4.0	10.5	3.0	10.0		
X2 "	3.5	9.5	2.8	9.5	2.5	10.0
X2-1/8 "	3.2	9.5	2.6	10.0	2.4	10.0
X2-1/4 "	3.0	9.5	2.4	9.5	2.2	9.5
X2-3/8 "	2.8	9.5	2.3	9.5	2.1	9.5
X2-1/2 "	2.7	9.5	2.2	9.5	2.0	9.5
X2-5/8 "					1.9	9.5
X2-3/4 "					1.8	9.0
X2-7/8 "					1.75	9.0
X3 "					1.7	9.0
X3-1/8 "					1.6	9.0
X3-1/4 "					1.55	9.0
X3-1/8 "					1.5	9.0
X3-1/2 "					1.45	9.0

DIN912 Hexagon Socket Cap Screw

Size: M3-M16
Length: 8-150mm
Finish: Zinc/ Black/ Plain/ Zinc Cr3
Grade: 8.8/ 10.9/ 12.9

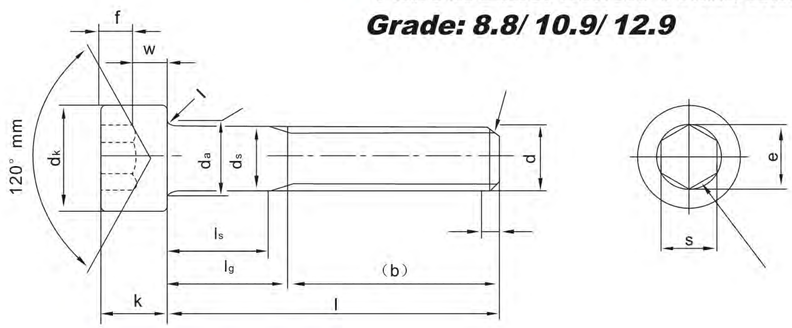

d		M3	M4	M5	M6	M8
		—	—	—	—	M8×1
p[1])		0.5	0.7	0.8	1	1.25
b		18	20	22	24	28
d_k	max.[2])	5.5	7	8.5	10	13
	max.[3])	5.68	7.22	8.72	10.22	13.27
	min.	5.32	6.78	8.28	9.78	12.73
d_a	max.	3.6	4.7	5.7	6.8	9.2
d_s	max.	3	4	5	6	8
	min.	2.86	3.82	4.82	5.82	7.78
e	min.[4])	2.87	3.44	4.58	5.72	6.86
f	max.	0.51	0.6	0.6	0.68	1.02
k	max.	3	4	5	6	8
	min.	2.86	3.82	4.82	5.7	7.64
r	min.	0.1	0.2	0.2	0.25	0.4
s	min.	2.5	3	4	5	6
	max.	2.52	3.02	4.02	5.02	6.02
		2.58	3.08	4.095	5.14	6.14
t	min.	1.3	2	2.5	3	4
u	max.	0.3	0.4	0.5	0.6	0.8
d_w	min.	5.07	6.53	8.03	9.38	12.33
w	min.	1.15	1.4	1.9	2.3	3

DIN912 Hexagon Socket Cap Screw

d		M10	M12	(M14)	(M16)	(M18)
		M10×1.25	M12×1.25	(M14×1.5)	(M16×1.5)	(M18×1.5)
		M10×1	M12×1	—	—	(M18×2)
p[1])		1.5	1.75	2	2	2.5
b		32	36	40	44	48
d_k	max.[2])	16	18	21	24	27
	max.[3])	16.27	18.27	21.33	24.33	27.33
	min.	15.73	17.73	20.67	23.67	26.67
d_a	max.	11.2	13.7	15.7	17.7	20.2
d_s	max.	10	12	14	16	18
	min.	9.78	11.73	13.73	15.73	17.73
e	min.[4])	9.15	11.43	13.72	16	16
f	max.	1.02	1.87	1.87	1.87	1.87
k	max.	10	12	14	16	18
	min.	9.64	11.57	13.57	15.57	17.57
r	min.	0.4	0.6	0.6	0.6	0.6
s	min.	8	10	12	14	14
	max.	8.025	10.025	12.032	14.032	14.032
		8.175	10.175	12.212	14.212	14.212
t	min.	5	6	7	8	9
u	max.	1	1.2	1.4	1.6	1.8
d_w	min.	15.33	17.23	20.17	23.17	25.87
w	min.	4	4.8	5.8	6.8	7.8

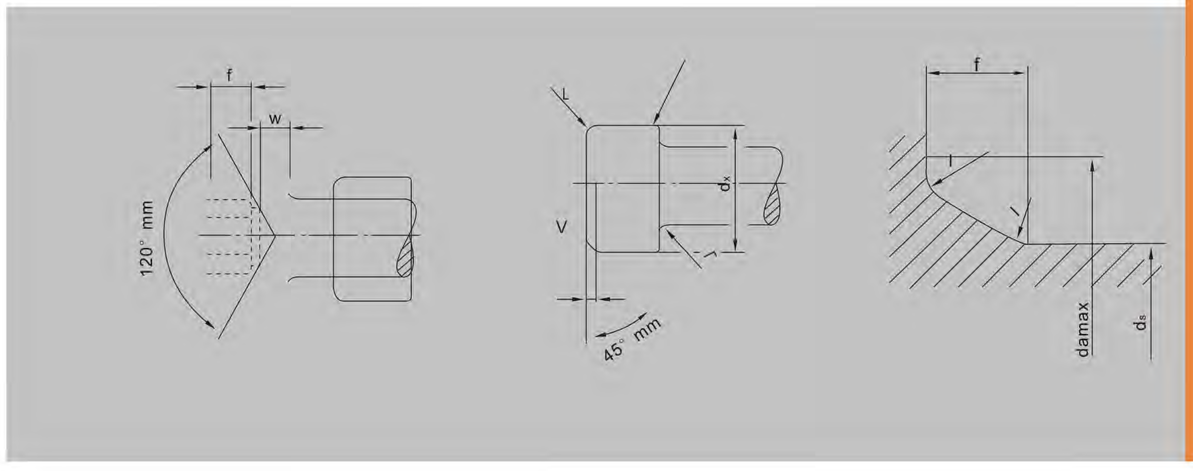

DIN933 Hexagon Head Screw

Size: M4-M16
Length: 8-150mm
Finish: Zinc/ Black/ Plain/ Zinc Cr3
Grade: 4.8/ 8.8/ 10.9/ 12.9

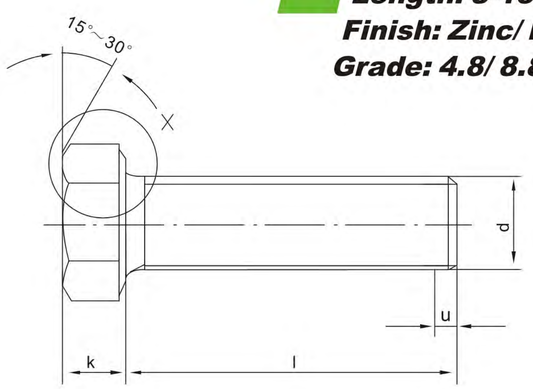

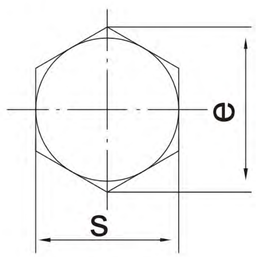

d			M4	M5	M6	M8	M10	M12	M14	M16
p[1])			0.7	0.8	1	1.25	1.5	1.75	2	2
a[2])	max.		2.1	2.4	3	3.75	4.5	5.25	6	6
c	min.		0.15	0.15	0.15	0.15	0.15	0.15	0.15	0.2
	max.		0.4	0.5	0.5	0.6	0.6	0.6	0.6	0.8
d_a	max.		4.7	5.7	6.8	9.2	11.2	13.7	15.7	17.7
d_w	min.	产品等级 A	5.9	6.9	8.9	11.6	15.6	17.4	20.5	22.5
		B	5.7	6.7	8.7	11.4	15.4	17.2	20.1	22
e	min.	产品等级 A	7.66	8.79	11.05	14.38	18.9	21.1	24.49	26.75
		B	7.6	8.63	10.89	14.2	18.72	20.88	23.91	26.17
k	公称尺寸		2.8	3.5	4	5.3	6.4	7.5	8.8	10
	A	min.	2.68	3.35	3.85	5.15	6.22	7.32	8.82	9.82
		max.	2.92	3.65	4.15	5.45	6.56	7.68	8.98	10.18
	B	min.	2.6	3.26	3.76	5.06	6.11	7.21	8.51	9.71
		max.	3	3.74	4.24	5.54	6.69	7.79	9.09	10.29
k´	min.		1.9	2.28	2.63	3.54	4.28	5.05	5.96	6.8
r	min.		0.2	0.2	0.25	0.4	0.4	0.6	0.6	0.6
s	max.=公称尺寸		7	8	10	13	17	19	22	24
	min.	产品等级 A	6.78	7.78	9.78	12.73	16.73	18.67	21.67	23.67
		B	6.64	7.64	9.64	12.57	16.57	18.48	21.16	23.16

DIN7991 Hexagon Socket Countersunk Head Screw

Size: M3-M16
Length: 8-150mm
Finish: Zinc/ Black/ Plain/ Zinc Cr3
Grade: 8.8/ 10.9/ 12.9

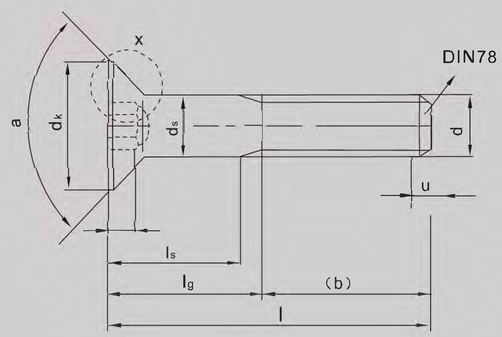

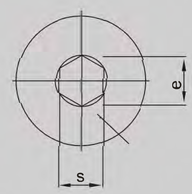

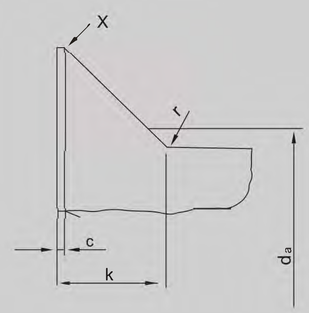

DIN7991 Hexagon Socket Countersunk Head Screw

d		M3	M4	M5	M6	M8	M10	M12
p[1])			0.7	0.8	1	1.25	1.5	1.75
a	+2″							
b	2)	12	14	16	18	22	26	30
	3)	—	—	—	24	28	32	36
	4)	—	—	—	—	—	45	49
c	~~	0.2	0.3	0.3	0.3	0.4	0.5	0.5
d_k	max.	6	8	10	12	16	20	24
	min.	5.7	7.64	9.64	11.57	15.57	19.48	23.48
d_a	max	3.6	4.7	5.7	6.8	9.2	11.2	13.7
d_s	max.	3	4	5	6	8	10	12
	min.	2.86	3.82	4.82	5.82	7.78	9.78	11.73
e[5])	min.	2.3	2.87	3.44	4.58	5.72	6.86	9.15
k[6])	max.	1.7	2.3	2.8	3.3	4.4	5.5	6.5
r	min.	0.1	0.2	0.2	0.3	0.5	0.5	1
s		2	2.5	3	4	5	6	8
	min.	2.02	2.52	3.02	4.02	5.02	6.02	8.025
	max.	2.10	2.60	3.10	4.12	5.14	6.14	8.175
t	max.	1.2	1.8	2.3	2.5	3.5	4.4	4.6
	min.	0.95	1.55	2.05	2.25	3.2	4.1	4.3

ISO 7380 Hexagon Socket Button Screw

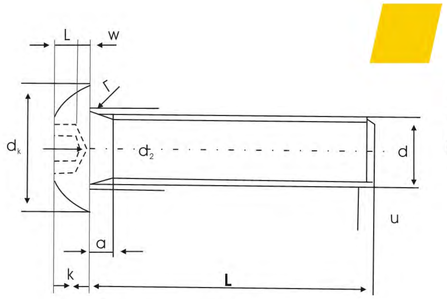

Size: M3-M16
Length: 8-150mm
Finish: Zinc/ Black/ Plain/ Zinc Cr3/ Nickel
Grade: 8.8/ 10.9/ 12.9

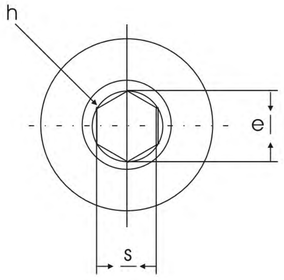

Alternative form of socket permissible

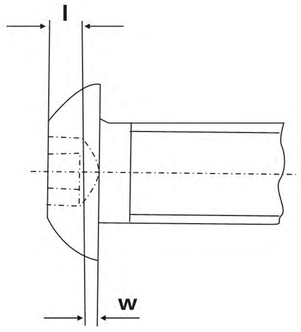

Concrete Screw

Concrete Screw, high–low thread, diamond cutting point, blue ruspert coating.

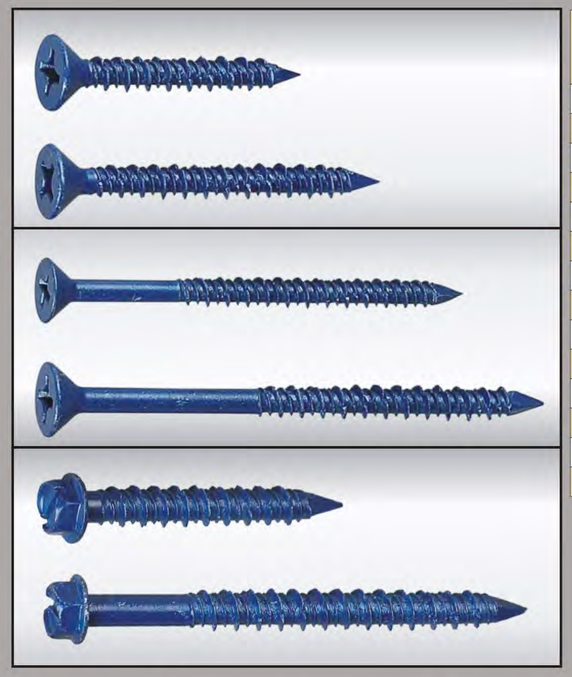

Size	Drill Bit (One bit included in each box of 100pcs.)	Fixture Thickness
3/16 x 1-1/4"	5/32 x 3-1/2"	0 - 1/4"
1/4 x 1-1/4"	3/16 x 3-1/2"	0 - 1/4"
3/16 x 1-3/4"	5/32 x 3-1/2"	1/4 - 3/4"
1/4 x 1-3/4'	3/16 X 3-1/2"	1/4 - 3/4"
3/16 X 2-1/4"	5/32 X 4-1/2"	3/4" - 1-1/4"
1/4 X 2-1/4"	3/16 X 4-1/2"	3/4" - 1-1/4"
3/16 x 2-3/4"	5/323 x 4-1/2"	1-1/4" - 1-3/4"
1/4 x 2-3/4"	3/16" x 4-1/2"	1-1/4" - 1-3/4"
3/16 x 3-1/4"	5/32 x 5-1/2"	1-3/4" - 2-1/4"
1/4 x 3-1/4"	3/16 x 5-1/2"	1-3/4" - 2-1/4"
3/16 x 3-3/4"	5/32 x 5-1/2"	2-1/4" - 2-3/4"
1/4 x 3-3/4"	3/16 x 5-1/2"	2-1/4" - 2-3/4"
3/16 x 4"	5/32 x 5-1/2"	2-1/2" - 3"
1/4 x 4"	3/16 x 5-1/2"	2-1/2" - 3"

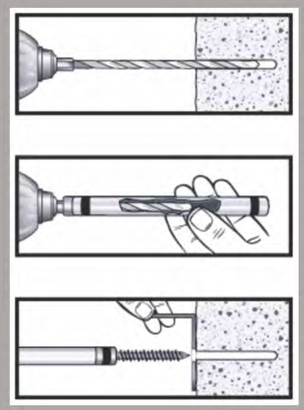

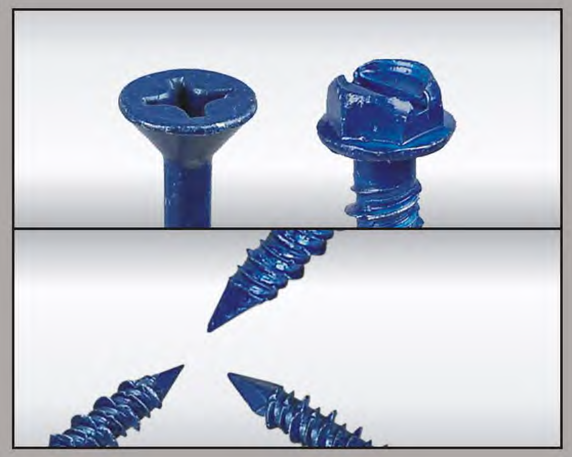

Chipboard Screw

Head Type: CSK, Double CSK, Pan, Flange
Drive Type: Pozi, Torx, Philips, Square, Slotted,
Point Type: Sharp, Type 17
Size: M3-M6
Length: 10 - 200mm

Special Chipboard Screw

Head Type: CSK, Flange
Drive Type: Pozi, Torx
Point Type: Type 17
Size: 3.5| 4.0| 5.0| 6.0| 8.0| 10.0
Length: 30 - 400mm

Used for hardwood lumber installation.

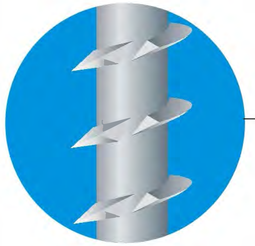

Special cutting notch design can enable to cut wood fibers easily saving time and labor cost.

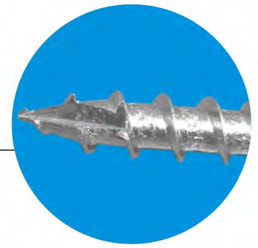

TYPE 17 point allows easy to start penetrating.

Cutting ribs under head for countersinking without splitting.

ANCHOR

Hammer Drive Expansion Bolt

Size(mm)	Screw size (mm)	Material
5*30	3.5*33	PA PE
5*35	3.5*38	
5*40	3.5*43	
5*50	3.5*53	
6*30	3.8*33	
6*35	3.8*38	
5*40	3.8*43	
6*50	3.8*53	
6*60	3.8*63	
6*70	3.8*73	
6*80	3.8*83	
6*100	3.8*103	
8*40	4.8*43	
8*45	4.8*48	
8*60	4.8*63	
8*80	4.8*83	
8*100	4.8*103	
8*120	4.8*123	
8*135	4.8*138	
8*140	4.8*143	
8*160	4.8*163	
10*80	5.8*83	
10*100	5.8*103	
10*120	5.8*123	
1*135	5.8*138	
10*140	5.8*143	
10*160	5.8*163	

Single-wing Screw-in Expansion Bolt

Size(mm)	Screw size (mm)	Material
6*40	4.8*43	PA PE
6*60	4.8*63	
6*80	48*83	
8*60	5.2*63	
8*80	5.2*83	
8*100	5.2*103	
8*120	5.2*123	
8*140	5.2*143	
10*80	6.8*83	
10*100	6.8*103	
10*120	6.8*123	
10*140	6.8*143	
10*160	6.8*163	

WEDGE ANCHORS

Thread Size	Thread Length	Min Embedment	Max.Fast Thickness	Weight kgs/1000	Pull Out Load/Kgs
M6x40	18	27	3	10.2	750
M6x70	25	35	30	16.7	750
M8x75	25	40	30	30	1000
M8x90	25	40	45	34.7	1000
M8x120	25	40	75	44	1000
M10x95	30	50	35	61	1300
M10x115	30	50	55	85	1300
M10x120	30	50	60	86	1300
M12x85	40	50	25	83.5	2000
M12x100	40	60	30	95	2000
M12x110	40	60	40	100.5	2000
M16x105	60	70	15	191	2900
M16x140	60	80	40	246	2900
M16x180	60	80	80	320	2900
M20x120	65	85	15	363	4600
M20x160	65	100	40	450	4600
1/4x1-3/4			8	11.6	1100
1/4x2-3/4	3/4'	1-1/8'	20	14.7	1100
3/8x2-1/4			10	37.5	2000
3/8x3"	1-1/8'	1-1/2'	20	44.5	2000
1/2x2-3/4			15	83	2900
1/2x4-1/4	1-1/4'	2-1/4'	40	111.8	2900
5/8x3-1/2	1-1/2'	2-3/4'	10	131.2	3000
3/4x5-1/2	1-1/2'	3-1/4'	25	364	4800

BOLT AHCHORS

Size	PCS/BOX	BOXES/CTN	QTY PCS/CTN	WEIGHT KGS/1000PCS
3/16x1-1/2"	250	8	2000	8.50
1/4x2"	150	8	1200	18.80
5/16x2-1/2"	100	8	800	33.90
3/8x2-3/4"	50	8	400	55.30
1/2x4"	25	8	200	128.20

TOGGLE BOLTS Unit:inch

Bolt Size	Drill Size	Quantity Box/Ctn	Weight Kgs Per 100pcs	Pul Out Load Kgs
1/8x2	3/8'	100x500	6	130
1/8x3	3/8'	100x500	8	130
3/16x2	1/2'	50x250	14.5	200
3/16x3	1/2'	50x250	18.1	200
3/16x4	1/2'	50x250	22	200
1/4x3	5/8'	50x200	29.5	500
1/4x4	5/8'	50x200	32.8	500

Bolt Size	Drill Size	Quantity Box/Ctn	Weight Kgs Per 100pcs	Pul Out Load Kgs
1/8'	3/8'	100x1000	3.6	130
3/16'	1/2'	10x1000	7	200
1/4'	5/8'	100x1000	11.3	500
5/16'	7/8'	50x500	21.4	550
3/8'	7/8'	50x500	27.5	680

SLEEVE AHCHORS

Anchor size	Weight kgs/1000	Qty-per Box/Ctn
3/16	18	50/1000

Anchor size	Weight kgs/1000	Qty-per Box/Ctn
3/16	21	50/1000
1/4	37	50/500

Anchor size	Weight kgs/1000	Qty-per Box/Ctn
3/16	21	50/1000
1/4	30	50/1000
5/16	54	50/500
3/8	82	25/250
1/2	190	20/200

Anchor size	Weight kgs/1000	Qty-per Box/Ctn
1/4	40	50/500
5/16	62.3	50/500
3/8	96.1	50/500
1/2	200.8	25/250

Anchor size	Weight kgs/1000	Qty-per Box/Ctn
1/4	31.78	50/1000
5/16	58.71	50/500
3/8	92.82	50/300
1/2	204.7	25/200

Anchor size	Weight kgs/1000	Qty-per Box/Ctn
1/4	24	50/1000
5/16	35	50/500
3/8	54	50/500
1/2	116	25/250

METAL FRAME ANCHOR

Size	Drill	Sieeve Length(L)	Machine Screw	Drill Hole	Fixing Length Depth	Box Ctn (PCS) Msx	Weight kgs/1000 Pcs
M8x72	8	72	5x88	50	42	100/500	21
M8x92	8	92	5x108	50	62	100/500	26.6
M8x112	8	112	5x128	50	82	100/500	31.8
M8x132	8	132	5x148	50	102	100/500	35.6
M10x72	10	70	6x88	50	40	100/500	33
M10x92	10	90	6x108	50	60	100/500	39
M10x112	10	110	6x128	50	80	100/500	46
M10x132	10	130	6x148	50	100	100/500	53
M10x152	10	150	6x168	50	140	100/500	59
M10x182	10	180	6x198	50	150	100/250	68
M10x202	10	200	6x218	50	170	100/250	78

HANGER BOLT

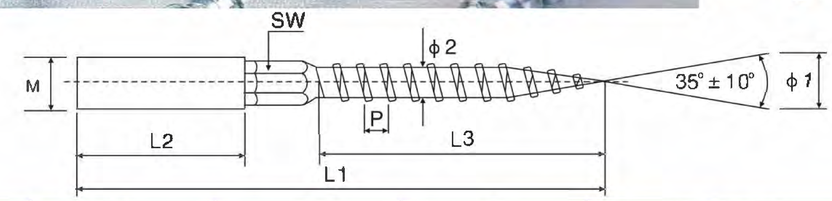

M	L1		L2		L3		Wood Theread			SW/LANGE	
	Length	Toleranoe	Metrlo	Toleranoe	Wood	Toleranoe			Pltch		
M6	50	±1.25	20	±2.0	30	±1.05	6±0.15	4.3±0.15	2.5±0.25	W/out	
M6	60	±1.5	25	±2.0	35	±1.25	6±0.15	4.3±0.15	2.5±0.25	W/out	
M6	80	±1.5	35	±2.0	35	±1.25	6±0.15	4.3±0.15	2.5±0.25	W/out	
M8	50	±1.25	11	±2.5	37	±1.25	7±0.15	5.4±0.15	3±0.3	W/out	
M8	60	±1.5	20	±2.5	37	±1.25	7±0.15	5.4±0.15	3±0.3	W/out	
M8	70	±1.5	25	±2.5	37	±1.25	7±0.15	5.4±0.15	3±0.3	W/out	
M8	80	±1.75	30	±2.5	37	±1.25	7±0.15	5.4±0.15	3±0.3	6–0.15	7±2
M8	90	±1.75	40	±2.5	37	±1.25	7±0.15	5.4±0.15	3±0.3	6–0.15	10±2
M8	100	±1.75	40	±2.5	47	±1.25	7±0.15	5.4±0.15	3±0.3	6–0.15	10±2
M8	110	±1.75	40	±2.5	47	±1.25	7±0.15	5.4±0.15	3±0.3	6–0.15	10±2
M8	120	±1.75	50	±2.5	47	±1.25	7±0.15	5.4±0.15	3±0.3	6–0.15	10±2
M8	125	±1.75	50	±2.5	47	±1.25	7±0.15	5.4±0.15	3±0.3	6–0.15	10±2
M8	140	±3.0	50	±2.5	47	±1.25	7±0.15	5.4±0.15	3±0.3	6–0.15	10±2
M8	150	±3.0	50	±2.5	47	±1.25	7±0.15	5.4±0.15	3±0.3	6–0.15	10±2
M8	160	±3.0	50	±2.5	47	±1.25	7±0.15	5.4±0.15	3±0.3	6–0.15	10±2
M8	180	±3.0	50	±2.5	62	±1.5	7±0.15	5.4±0.15	3±0.3	6–0.15	10±2
M8	200										

M	L1		L2		L3		Wood Theread			SW/LANGE	
	Length	Toleranoe	Metrlo	Toleranoe	Wood	Toleranoe			Pltch		
M10	50	±1.25	15	±3	35	±1.25	9.2±0.15	6.9±0.15	2.5±0.25	W/out	
M10	60	±1.5	20	±3	35	±1.25	9.2±0.15	6.9±0.15	2.5±0.25	W/out	
M10	70	±1.5	20	±3	35	±1.25	9.2±0.15	6.9±0.15	2.5±0.25	W/out	
M10	80	±1.5	20	±3	45	±1.25	9.2±0.15	6.9±0.15	3.0±0.3	8–0.15	10±2
M10	90	±1.75	20	±3	45	±1.5	9.2±0.15	6.9±0.15	3.0±0.3	8–0.15	10±2
M10	100	±1.75	40	±3	45	±1.5	9.2±0.15	6.9±0.15	3.0±0.3	8–0.15	10±2
M10	110	±1.75	40	±3	55	±1.5	9.2±0.15	6.9±0.15	3.0±0.3	8–0.15	10±2
M10	120	±1.75	40	±3	55	±1.5	9.2±0.15	6.9±0.15	3.0±0.3	8–0.15	10±2
M10	125	±1.75	40	±3	55	±1.5	9.2±0.15	6.9±0.15	3.0±0.3	8–0.15	10±2
M10	140	±3.0	50	±3	55	±1.5	9.2±0.15	6.9±0.15	3.0±0.3	8–0.15	10±2
M10	150	±3.0	50	±3	55	±1.5	9.2±0.15	6.9±0.15	3.0±0.3	8–0.15	10±2
M10	160	±3.0	50	±3	55	±1.5	9.2±0.15	6.9±0.15	3.0±0.3	8–0.15	10±2
M10	180	±3.0	50	±3	55	±1.5	9.2±0.15	6.9±0.15	3.0±0.3	8–0.15	10±2
M10	200	±3.3	50	±3	55	±1.5	9.2±0.15	6.9±0.15	3.0±0.3	8–0.15	10±2
M12	125	±3.3	50	±3	55	±1.5	10.7±0.15	10±0.15	4.0±0.3	10–0.15	12±2

ANCHOR

Sleeve anchor,hook type

Size	Pcs/box	Boxes/CTN	QTY/CTN	N.W/box
M6*8*40	155	6	930	23.3
M6*8*45	135	6	810	21.9
M6*8*50	125	6	750	22.1
M8*10*50	80	6	480	23.0
M8*10*55	70	6	420	21.4
M8*10*60	70	6	420	22.7
M8*10*65	65	6	390	22.2
M8*10*80	60	6	360	24.1
M8*10*100	50	6	300	23.4
M10*12*60	45	6	270	24.3
M10*12*70	35	6	210	22.3
M10*12*80	30	6	180	21.8
M10*12*100	25	6	150	22.7
M10*12*120	20	6	120	21.8
M12*16*90	20	6	120	23.3
M12*16*100	15	6	90	19.4
M12*16*120	15	6	90	22.0

SLEEVE ANCHOR BOLT TYPE

Size	Pcs/box	Boxes/CTN	Pcs/CTN
M6*8*45	220	6	1320
M6*8*50	200	6	1200
M6*8*60	180	6	1080
M6*8*70	135	6	810
M6*8*75	135	6	810
M6*8*80	130	6	780
M6*8*85	130	6	780
M6*8*100	100	6	600
M6*8*120	100	6	600
M8*10*40	125	6	750
M8*10*50	100	6	600
M8*10*60	100	6	600
M8*10*70	80	6	480
M8*10*75	80	6	480
M8*10*80	80	6	480
M8*10*90	80	6	480
M8*10*100	70	6	420
8*10*110	65	6	390
M8*10*120	60	6	360
M8*10*140	50	6	300
M8*10*150	50	6	300
M10*12*60	60	6	360
M10*12*70	50	6	300
M10*12*75	50	6	300
M10*12*80	50	6	300

Size	Pcs/box	Boxes/CTN	Pcs/CTN
10*12*90	45	6	270
M10*12*100	40	6	240
M10*12*120	40	6	240
M10*12*130	30	6	180
M10*12*150	30	6	180
10*12*180	25	6	150
M12*16*65	30	6	180
M12*16*70	30	6	180
M12*16*80	30	6	180
M12*16*100	25	6	150
M12*16*110	25	6	150
M12*16*125	20	6	120
M12*16*130	20	6	120
M12*16*150	15	6	90
12*16*190	12	6	72
12*16*200	12	6	72
12*16*250			0
M16*20*100	15	6	90
M16*20*110	13	6	78
M16*20*120	12	6	72
M16*20*125	12	6	72
M16*20*150	10	6	60
M16*20*160	10	6	60
16*20*180	8	6	48
M16*20*200	8	6	48

ANCHOR

FOUR PCS ANCHOR WITH HEX BOLT

Size	Pcs/box	Boxes/CTN	QTY/CTN	Size/box
M6 x 50	100	12	1.200	26.5x26x21cm
M8 x 60	50	12	0.600	29x16x23cm
M10 x 70	25	12	0.300	28x18.5x18.5cm
M12 x 90	20	12	0.240	26.5x26x21cm
M16 x 110	9	12	0.108	30x17x26cm
M16 x 130	9	12	0.108	30 X 17 X 26cm
M20 x 150	4	12	0.048	30x17x26cm

FOUR PCS ANCHOR

Size	Pcs/box	Boxes/CTN	QTY/CTN	Size/box
M6	200	10	2.00	46.5x23x13.5cm
M8	100	10	1.00	46.5x23x13.5 cm
M10	50	10	0.50	44x24.5x12cm
M12	25	10	0.25	44x24.5x12cm
M16	15	10	0.15	46.5x23x13.5cm

FOUR PCS ANCHOR,EYE TYPE

Size	Pcs/box	Boxes/CTN	QTY/CTN	Size/box
M6	50	10	0.50	39.5x19x14.5 CM
M8	30	10	0.30	39.5x19x14.5 CM
M10	15	10	0.15	39.5x19x14.5 CM
M12	8	10	0.08	39.5x19x14.5 CM

FOUR PCS ANCHOR,HOOK TYPE

Size	Pcs/box	Boxes/CTN	QTY/CTN	Size/box
M6	50	10	0.50	39.5x19x14.5 CM
M8	30	10	0.30	39.5x19x14.5 CM
M10	15	10	0.15	39.5x19x14.5 CM
M12	8	10	0.08	39.5x19x14.5 CM

Non-standard Screw

If it′ s standard we stock it,
If it′ s special we stock it anyway!

Magnetic Nut Setter

Material: Cr-V steel, types magnetic
Surface treatment: sandblasted/ zinc/nickel/chrome
Fitting nut size: 1/4″ 5/16″ 3/8″
Overall length: 45mm, 48mm, 65mm,150mm
With 1/4" hex quick change shank to fit our featured quick change connector

Pallet Nail

Round head with groove shank,pallet nail
Material:low carbon steel
Finish:zinc/hot dip galvanized

Size

- ∅ 2.3×30mm
- ∅ 2.5×40mm
- ∅ 2.5×50mm
- ∅ 2.5×60mm
- ∅ 3.4×80mm
- ∅ 4.1×100mm
- ∅ 4.5×125mm

Concrete Nail

CSK head with groove or smooth shank, concrete nail
Material: medium carbon steel
Finish: zinc/ hot dip galvanized/black

Size

- ∅ 1.6 × 16mm
- ∅ 1.8× 20mm
- ∅ 2.0× 25mm
- ∅ 2.5× 30mm
- ∅ 3.0× 40mm
- ∅ 3.76× 50mm
- ∅ 4.19 × 65mm
- ∅ 4.57× 75mm
- ∅ 4.57 × 100mm

PVC seal washer（cone-shaped）

Size

14#-6.3×10
14#-6.3×12

PVC seal washer（transparent）

Size

12#-5.5×10
12#-5.5×12

EPDM joint washer

Size

14#-6.3×14
14#-6.3×16
14#-6.3×19
14#-6.3×25

Glue conjoint washer

Size

12#-5.5×14
12#-5.5×16
12#-5.5×19
12#-5.5×25
10#-4.8×14
10#-4.8×16

Head Types		Types of Drive Inserts		Thread Types	
Cheese		Slotted		Type AB	
Binding		Philips Recess		Type A	
Pan		Square Socket		Type B	
Truss		Hexagon Recess		Type BP	
Flat		Indented Hexagon		Type C	
Oval		Special Cross Recess		Type D or 1	
Round		Pozidrive Cross Recess		Type F	
Hexagon		Slotted& square Socket		Type G	
Hesagon Washer				Type T or 23	
Pan Washer				Type BF	
				Type BT or 25	
				Type U	
				Type BG or H	
				Type Bz	

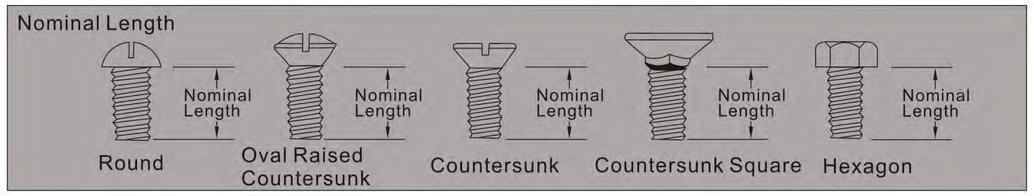

MALAXY

Nuts

DIN 936

ISO - EN -

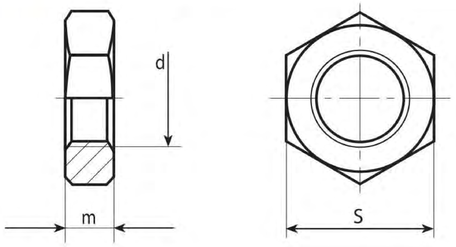

Hexagon thin nuts

d	M8	M8x1	M10	M10x1	M10x1,25	M12
P	1,25	1	1,5	1	1,25	1,75
m (nom.)	5	5	6	6	6	7
s (nom.)	13	13	17/16*	17/16*	17/16*	19/18*

d	M12x1,25	M12x1,5	M14	M14x1,5	M16	M16x1,5
P	1,25	1,5	2	1,5	2	1,5
m (nom.)	7	7	8	8	8	8
s (nom.)	19/18*	19/18*	22/21*	22/21*	24	24

d	M18	M18x1,5	M18x2	M20	M20x1,5	M20x2
P	2,5	1,5	2	2,5	1,5	2
m (nom.)	9	9	9	9	9	9
s (nom.)	27	27	27	30	30	30

d	M22	M22x1,5	M22x2	M24	M24x1,5	M24x2
P	2,5	1,5	2	3	1,5	2
m (nom.)	10	10	10	10	10	10
s (nom.)	32/34*	32/34*	32/34*	36	36	36

DIN 934

ISO 4032 EN 24032

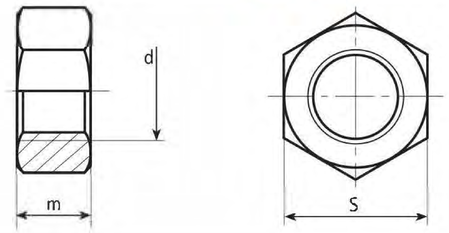

Hexagon nuts

d	M3	M4	M5	M6	M7	M8	M10	M12	M14
P	0,5	0,7	0,8	1	1	1,25	1,5	1,75	2
m	2,4	3,2	4	5	5,5	6,5	8	10	11
s	5,5	7	8	10	11	13	17/16*	19/18*	22/21*

d	M16	M18	M20	M22	M24	M27	M30	M33	M36
P	2	2,5	2,5	2,5	3	3	3,5	3,5	4
m	13	15	16	18	19	22	24	26	29
s	24	27	30	32/34*	36	41	46	50	55

d	M39	M42	M45	M48	M52	M56	M60	M64	M68
P	4	4,5	4,5	5	5	5,5	5,5	6	6
m	31	34	36	38	42	45	48	51	54
s	60	65	70	75	80	85	90	95	100

d	M72	M76	M80	M90	M100	M110
P	6	6	6	6	6	6
m	58	61	64	72	80	88
s	105	110	115	130	145	155

DIN 928

ISO - EN -

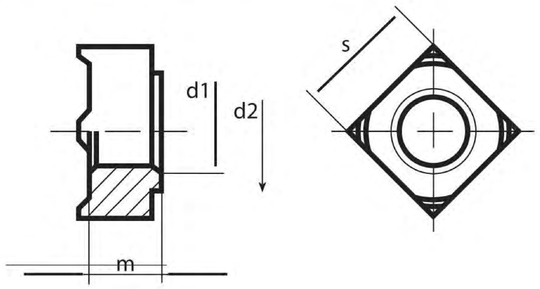

Square weld nuts

d1	M4	M5	M6	M8	M10	M12	M14	M16
p	0,7	0,8	1	1,25	1,5	1,75	2	2
m (h14)	3,5	4,2	5	6,5	8	9,5	11	13
s (h14)	7	9	10	14	17	19	22	24
d2	6	7	8	10,5	12,5	14,8	16,8	18,8

DIN 929

ISO - EN -

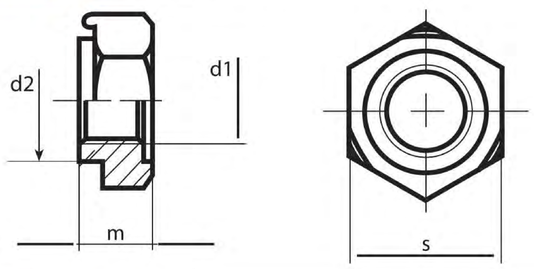

Hexagon weld nuts

d1	M3	M4	M5	M6	M8	M10	M12	M14	M16
p	0,5	0,7	0,8	1	1,25	1,5	1,75	2	2
m (h14)	3	3,5	4	5	6,5	8	10	11	13
s (h13)	7,5	9	10	11	14	17	19	22	24
d2	4,5	6	7	8	10,5	12,5	14,8	16,8	18,8

DIN 985

ISO - EN -

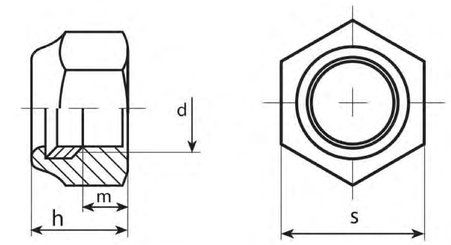

Prevailing torque type hexagon nuts with nylon insert

d	M3	M4	M5	M6	M7	M8	M10	M12	M14	M16	M18
p	0,5	0,7	0,8	1	1	1,25	1,5	1,75	2	2	2,5
s	5,5	7	8	10	1	13	17/16*	19/18*	22/21*	24	27
h	4	5	5	6	7,5	8	10	12	14	16	18,5

d	M20	M22	M24	M27	M30	M33	M36	M39	M42	M45	M48
p	2,5	2,5	3	3	3,5	3,5	4	4	4,5	4,5	5
s	30	32/34*	36	41	46	50	55	60	65	70	75
h	20	22	24	27	30	33	36	39	42	45	48

DIN 6923

ISO 4161 EN -

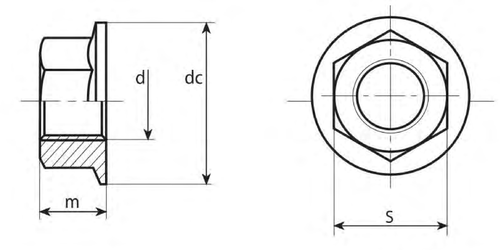

Hexagon flange nuts

d	M5	M6	M8	M10	M12	M14	M16	M20
p	0,8	1	1,25	1,5	1,75	2	2	2,5
m	5	6	8	10	12	14	16	20
s	8	10	13	15	18	21	24	30
dc	11,8	14,2	17,9	21,8	26	29,9	34,5	42,8

MALAXY

ISO - EN - DIN 935

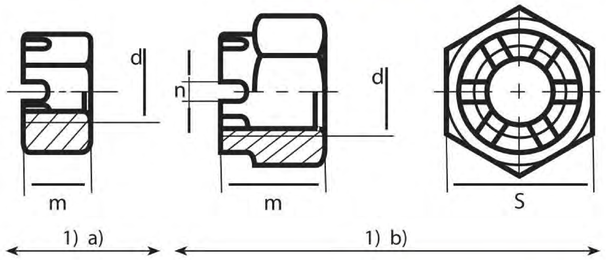

Hexagon castle nuts

d	M4	M5	M6	M7	M8	M10	M12	M14
p	0,7	0,8	1	1	1,25	1,5	1,75	2
m	5	6	7,5	8	9,5	12	15	16
s	7	8	10	11	13	17/16*	19/18*	22/21*
n	1,2	1,4	2	2	2,5	2,8	3,5	3,5

d	M16	M18	M20	M22	M24	M27	M30	M33
p	2	2,5	2,5	2,5	3	3	3,5	3,5
m	19	21	22	26	27	30	33	35
s	24	27	30	32/34*	36	41	46	50
n	4,5	4,5	4,5	5,5	5,5	5,5	7	7

d	M36	M39	M42	M45	M48	M52	M56	M60
p	4	4	4,5	4,5	5	5	5,5	5,5
m	38	40	46	48	50	54	57	63
s	55	60	65	70	75	80	85	90
n	7	7	9	9	9	9	9	1

ISO - EN - DIN 1587

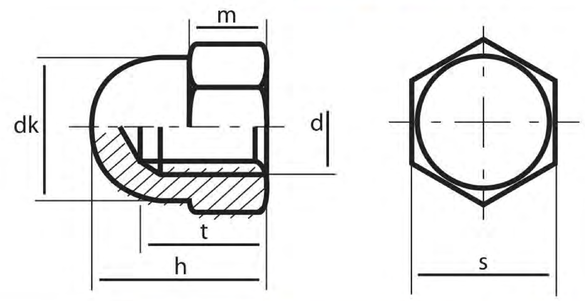

Hexagon domed cap nuts, high type

d	M4	M5	M6	M8	M10	M12
p	0,7	0,8	1	1,25	1,50	1,75
m (max)	3,2	4	5	6,5	8	10
s	7	8	10	13	17/16*	19 /18*
h	8	10	12	15	18	22
dk (max)	6,5	7,5	9,5	12,5	16	18
t	5,5	7,5	8	11	13	16

d	M14	M16	M18	M20	M22	M24
p	2	2	2,5	2,5	2,5	3
m (max)	11	13	15	16	18	19
s	22/21*	24	27	30	32 /34*	36
h	25	28	32	34	39	42
dk (max)	21	23	26	28	31	34
t	18	21	25	26	29	31

Room 1004,No. 95, West Beijing Road, Huang Pu District, Shanghai, P.R.China/Tel: +86-21-63592960/Fax: +86-21-63595065/E-mail: sales@gntcn.com

DIN 125-A

ISO 7089 EN -

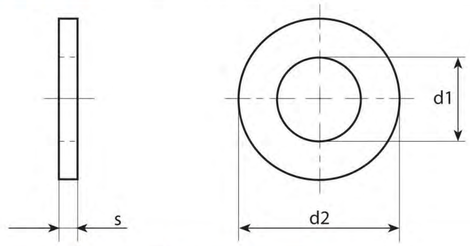

Plain washers without chamfer

d nom.	M3	M4	M5	M6	M7	M8	M10	M12	M14
d_1	3,2	4,3	5,3	6,4	7,4	8,4	10,5	13	15
d_2	7	9	10	12	14	16	20	24	28
s	0,5	0,8	1	1,6	1,6	1,6	2	2,5	2,5

d nom.	M16	M18	M20	M22	M24	M27	M30	M33	M36
d_1	17	19	21	23	25	28	31	34	37
d_2	30	34	37	39	44	50	56	60	66
s	3	3	3	3	4	4	4	5	5

d nom.	M39	M42	M45	M48	M52	M56	M60	M64
d_1	40	43	46	50	54	58	62	66
d_2	72	78	85	92	98	105	110	115
s	6	7	7	8	8	9	9	9

DIN 9021

ISO 7089 EN -

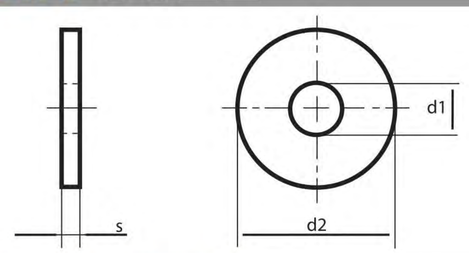

Plain washers $d_2 \approx 3 \times d_1$

d nom.	M3	M4	M5	M6	M7
d_1 (min)	3,2	4,3	5,3	6,4	7,4
d_2 (max)	9	12	15	18	22
s	0,8	1	1,2	1,6	2

d nom.	M8	M10	M12	M14	M16
d_1 (min)	8,4	10,5	13	15	17
d_2 (max)	24	30	37	44	50
s	2	2,5	3	3	3

d nom.	M18	M20	M24
d_1 (min)	20	22	26
d_2 (max)	56	60	72

DIN 7989

ISO - EN -

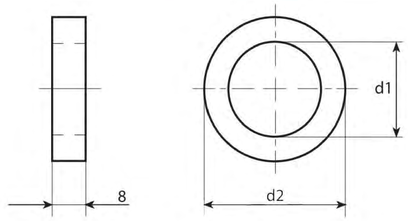

Washers for steel structures

d nom.	M10	M12	M16	M20	M22	M24	M27	M30	M33	M36
d_1	11	14	18	22	24	26	30	33	36	39
d_2	21	24	30	37	39	44	50	56	60	66

DIN 127-B

ISO - EN -

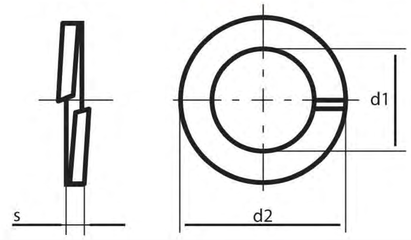

Spring lock washers

d nom.	M3	M4	M5	M6	M7	M8	M10	M12
d1 (min)	3,1	4,1	5,1	6,1	7,1	8,1	10,2	12,2
d2 (max)	6,2	7,6	9,2	11,8	12,8	14,8	18,1	21,1
s	0,8	0,9	1,2	1,6	1,6	2	2,2	2,5

d nom.	M14	M16	M18	M20	M22	M24	M27	M30
d1 (min)	14,2	16,2	18,2	20,2	22,5	24,5	27,5	30,5
d2 (max)	24,1	27,4	29,4	33,6	35,9	40	43	48,2
s	3	3,5	3,5	4	4	5	5	6

d nom.	M36	M39	M42	M45	M48	M52
d1 (min)	36,5	39,5	42,5	45,5	49	53
d2 (max)	58,2	61,2	68,2	71,2	75	83
s	6	6	7	7	7	8

DIN 7980

ISO - EN -

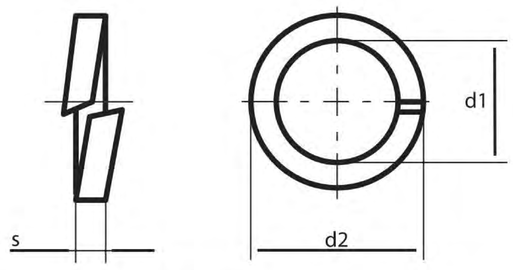

Spring lock washers

d nom.	M3	M4	M5	M6	M8	M10	M12
d_1 (min)	3,1	4,1	5,1	6,1	8,1	10,2	12,2
d_2 (max)	5,6	7	8,8	9,9	12,7	16	18
s	1	1,2	1,6	1,6	2	2,5	2,5

d nom.	M14	M16	M20	M22	M24	M27	M30
d_1 (min)	14,2	16,2	20,2	22,5	24,5	27,5	30,5
d_2 (max)	21,1	24,4	30,6	32,9	35,9	38,9	44,1
s	3	3,5	4,5	4,5	5	5	6

DIN 6798-A

ISO - EN -

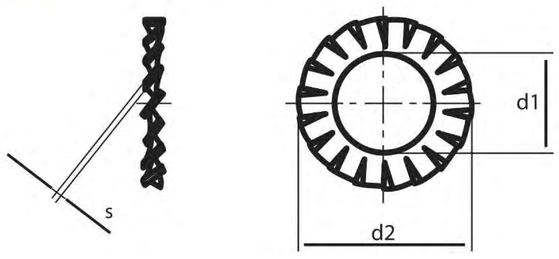

Serrated lock washers, external teeth

d nom.	M3	M4	M5	M6	M7	M8	M10	M12
d_1	3,2	4,3	5,3	6,4	7,4	8,4	10,5	13
d_2	6	8	10	11	12,5	15	18	20,5
s	0,4	0,5	0,6	0,7	0,8	0,8	0,9	1

d nom.	M14	M16	M18	M20	M22	M24	M27	M30
d_1	15	17	19	21	23	25	28	31
d_2	24	26	30	33	36	38	44	48
s	1	1,2	1,4	1,4	1,5	1,5	1,6	1,6

MALAXY

Factory: No. 1, Zhejiang Kaiji Science and Technology Industrial Park, Jiaxing City, Zhejiang Province
Export Branch Office: 8F, 694 Huimin Road, Yangpu District, Shanghai, P.R.China
Tel: +86 (021) 5505 8885
Email: info@malaxygroup.com